REV	DESCRIPTION

FOR REFERENCE ONLY

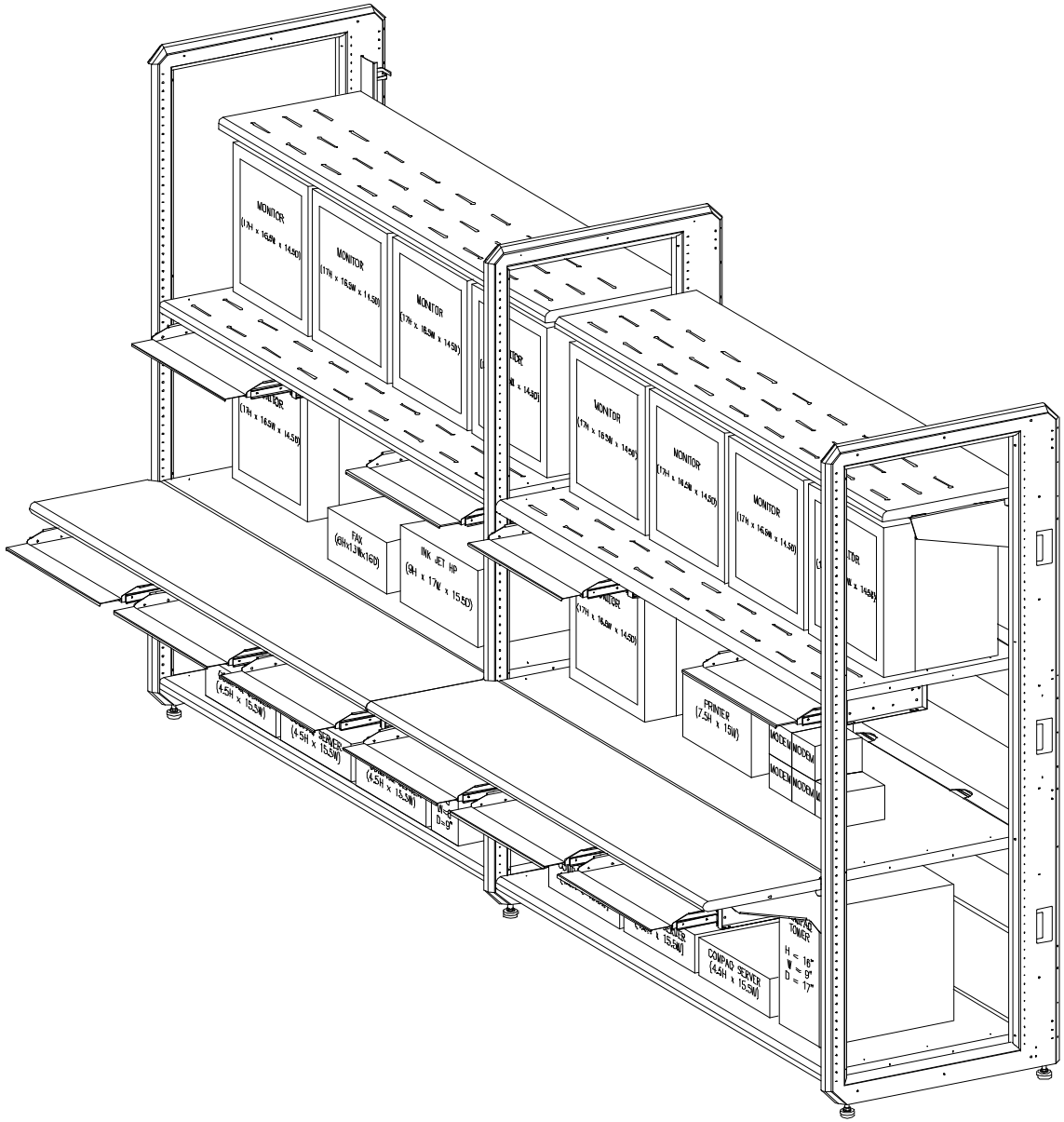

This document contains Great Lakes Case & Cabinet/ Proprietary information and may not be reproduced, disclosed, or utilized in whole or in part without its prior written authorization. Unpublished – All rights reserved under copyright

DIMENSIONS IN INCHES DO NOT SCALE
TOLERANCES ON DIMENSIONS UNLESS OTHERWISE SPECIFIED
DECIMAL .XXX ± .010 .XX ± .015 .X ± .020 ANGULAR ± 1/2°
FILE LOCATION: E:\1-DWGS\1\CONFIG\C-0186-OA\SK-2.dwg

DESIGN CHG#	DRAWN BY: JAYE	REV. DATE:	
QTY PER UNIT:	ISSUE DATE: 7-21-98	PART DESCRIPTION: ADVANTAGE 2000+ OPEN ARCHITECTURE WORK STATION	
SCALE: N.T.S.	CUSTOMER#		
MATERIAL:	SHEET: 2 OF 3		

Great Lakes case & cabinet co., inc.
Great Lakes Case & Cabinet Co.
P.O. Box 551 / Edinboro, PA 16412
PHONE:(814)734-7303 FAX:(814)734-3907 EMAIL:glcc@greatlakescabinets.com

REV. 0 DRAWING NO. C-0186-OA